Parts List				Parts List			
ITEM	QTY	PART NUMBER	DESCRIPTION	ITEM	QTY	PART NUMBER	DESCRIPTION
1	15 EA	RMCTN2X2X8	PACKAGING	13	24 EA	RMRIV48	KEEPER RIVET
2	5 EA	RMCTN3/8X4X8	PACKAGING	14	22 EA	RMRIV66	HINGE RIVET
3	19.85 FT	RMGAS1/4PORON	GASKET	15	1 EA	RMSC1/4-20X1/2HHCS	HASP PIN SCREW
4	1 EA	RMHASPNGG	HASP PIN	16	24 EA	RMWAS3/8X1/8X062	LATCH WASHER
5	6.5 FT	RMHING96	96" STEEL HINGE	17	11 EA	RMWASAN960C10L	HINGE WASHER
6	12 EA	RMKEEPLL150WT	KEEPER	18	10 EA	RMWAS3/8	BP STUD WASHER
7	9 EA	RMLATNLL150	LONGSIDE/BOTTOM LATCH	19	10 EA	RMWAS3/8L	BP STUD LOCK WASHER
8	3 EA	RMLATNLL150HSPEC	TOPSIDE LATCH	20	4 EA	RMSCEB28	EYE-BOLT
9	1 EA	WPN903636BOX	FIBERGLASS BOX	21	4 EA	RMWAS3/4	EYE-BOLT WASHER
10	1 EA	WPN9036CVR	FIBERGLASS COVER	22	4 EA	RMNUT3/4-10	EYE-BOLT NUT
11	10 EA	RMNUT3/8-16	BACK PANEL STUD NUT	23	1 EA	RMLAB508	UL LABEL
12	24 EA	RMRIV44	KEEPER RIVET	24	1 EA	RMINSTG	GROUNDING INSTRUCTIONS

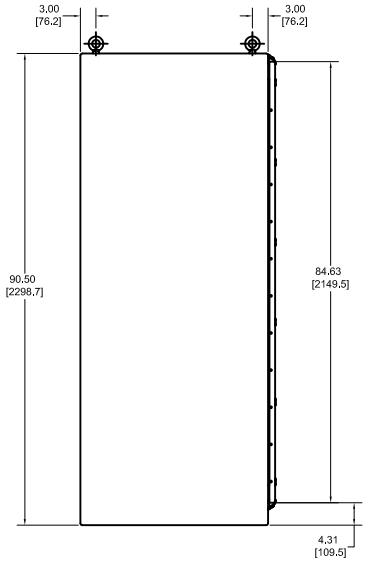

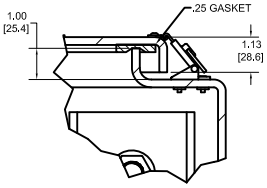

DETAIL A
SCALE 1 / 2

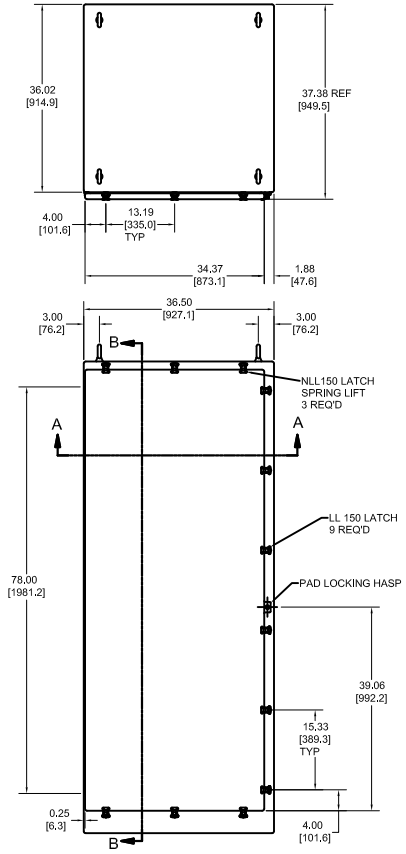

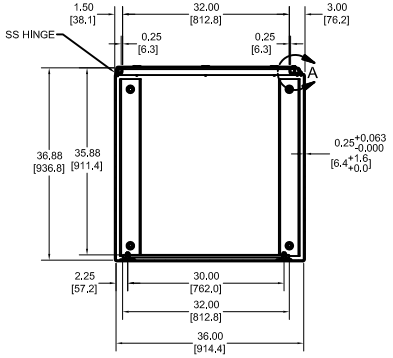

SECTION A-A

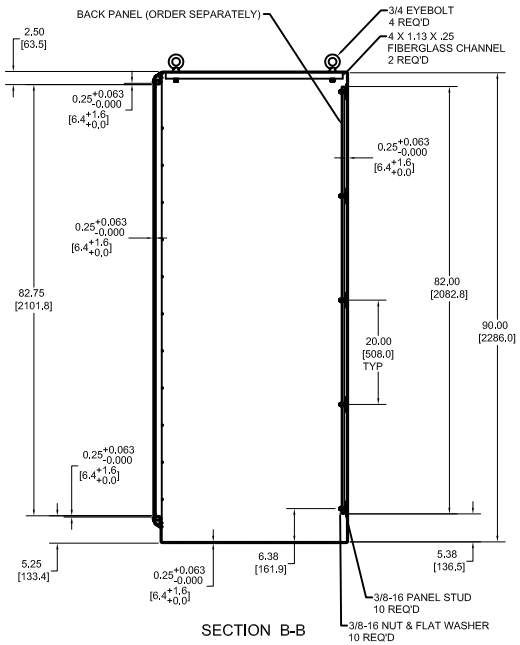

SECTION B-B

NOTES:	UL TYPE 4X, IEC IP66, WALL THK. 1/4						ALL DIMENSIONS ARE INCHES (MILLIMETERS) UNLESS SPECIFIED	TOLERANCES UNLESS SPECIFIED	.XX ± 0.13 (3.18) .XXX ± 0.063 (0.794)
	EXTERIOR & INTERIOR GLACIER GRAY								
MATERIAL				DR. BY	DATE	STAHLIN ENCLOSURES DIVISION OF ROBROY INDUSTRIES	BELDING, MICHIGAN 48809		
				ENT/PM	9/28/2006				
LET.	REVISION RECORD	DATE	BY	CHK. BY	DATE				
A	ADDED BOM AND NOTES	10/3/11	SL						
				APD. BY	DATE	CUSTOMER			
				SCALE 1/12		PART NAME ENCLOSURE		PART NO. N903636FSHWT	

THIS DRAWING AND THE INFORMATION HEREON ARE OUR PROPERTY AND MAY BE USED BY OTHERS ONLY AS AUTHORIZED BY STAHLIN ENCLOSURES, A DIVISION OF ROBROY INDUSTRIES. ALL RIGHTS RESERVED UNDER THE COPYRIGHT LAWS